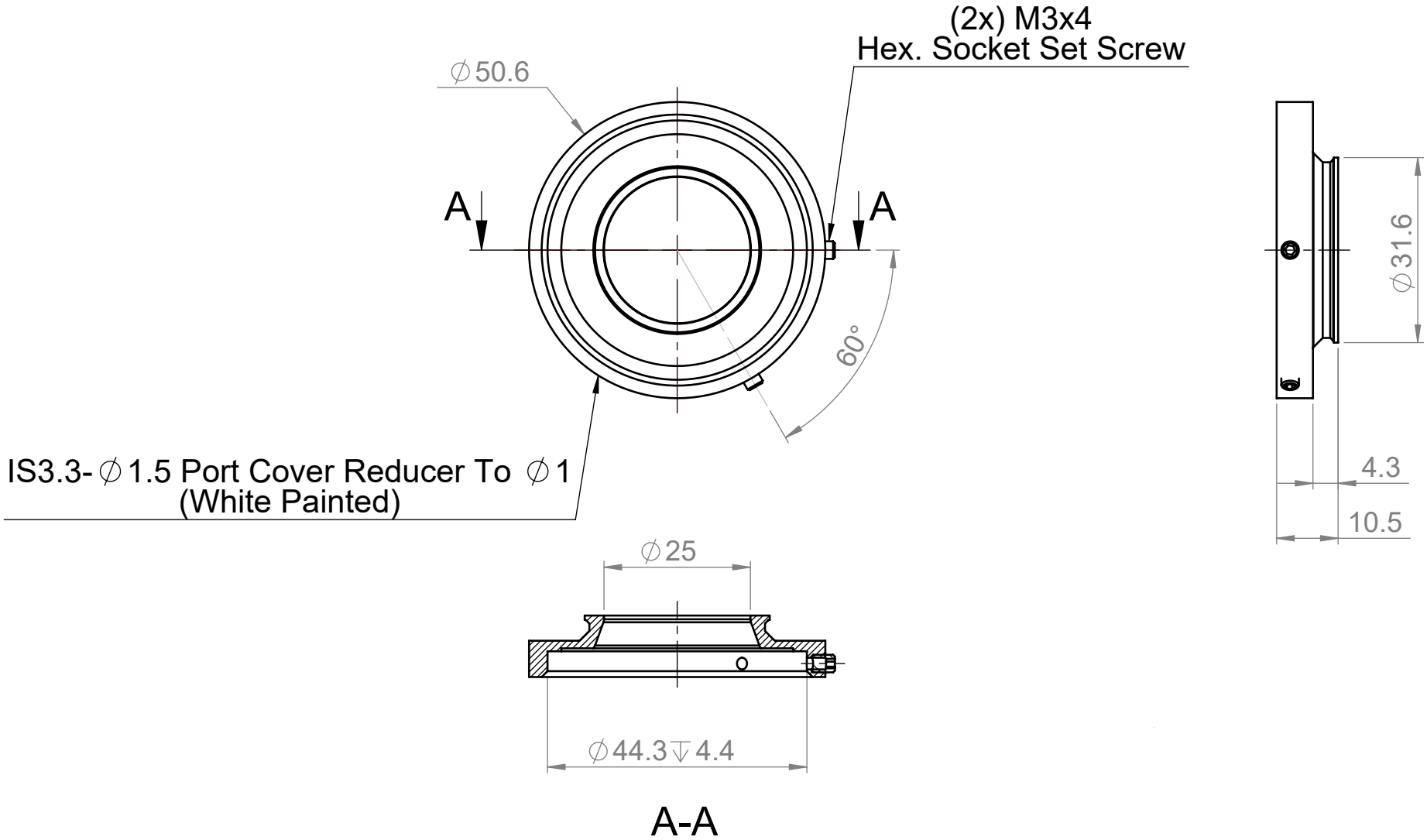
(2x) M3x4
Hex. Socket Set Screw
∅50.6
A
A
60°
IS3.3-∅1.5 Port Cover Reducer To ∅1
(White Painted)
∅31.6
4.3
10.5
∅25
∅44.3↧4.4
A-A